POLYTRONIX, INC.

PG-120626 Series

OUTLINE DIMENSION

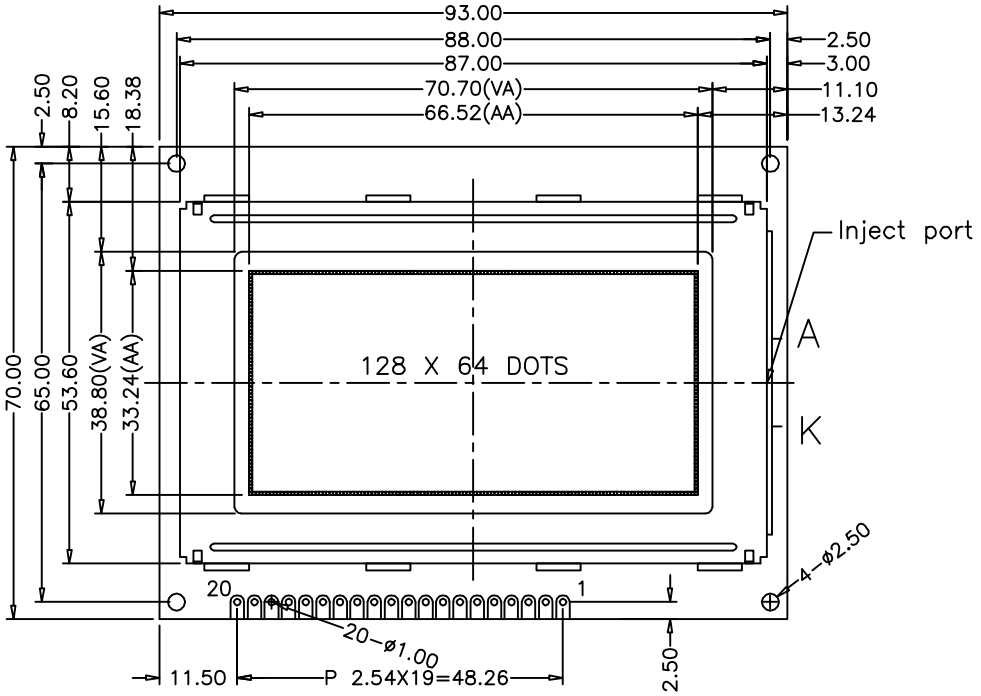

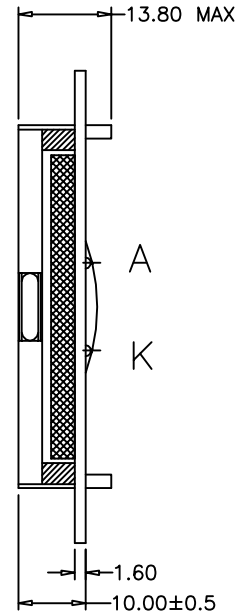

WITH LED B/L

MECHANICAL DIMENSION	
Overall Dimension (mm)	93.0 X 70.0 X 13.8
Viewing Area (mm)	70.70 X 38.80
Format	128 SEG × 64 COM
Dot Size (mm)	0.48 X 0.48
Dot Pitch (mm)	0.52 X 0.52

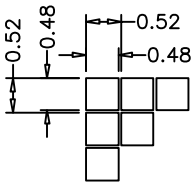

Dot Size

ADSOLUTE MAXIMUM RATINGS				
Parameter	Symbol	MIN	MAX	Unit
Supply Voltage for Logic	Vdd-Vss	-0.3	+5.5	V
Supply Voltage for LCD	Vlcd	Vdd - 0.3	Vdd + 7.0	V
Input Voltage	Vin	Vdd - 0.3	Vdd + 0.3	V

ELECTRICAL CHARACTERISTICS (VDD=5.0V ; Top=25° C)					
Parameter	Symbol	MIN	Typical	MAX	Unit
Power Supply Voltage	Vdd-Vss		5.0		V
LCD Operating Voltage	Vop		5.2		V
LCM Current Comsumption	Idd				mA
Backlight Current Consumption	LED (Edge)				mA
	LED (Array)				mA
Driving Method	1/32 Duty 1/5 Bias				

PIN ASSIGMENT		
Pin No.	Symbol	Function
1	VSS	Power Supply (GND)
2	VDD	Power Supply (+)
3	NC	
4	RS(CS)	
5	R/W(SID)	Data Read / write
6	E(SCLK)	Enable Signal
7	DB0	Data Bus Line
8	DB1	Data Bus Line
9	DB2	Data Bus Line
10	DB3	Data Bus Line
11	DB4	Data Bus Line
12	DB5	Data Bus Line
13	DB6	Data Bus Line
14	DB7	Data Bus Line
15	PSB	
16	NC	
17	/RST	
18	NC	
19	LEDA	Power Supply for LED B/L (-)
20	LEDK	Power Supply for LED B/L (+)

NOTES

IC Controller / Driver: ST7920 or Equivalent
LCD : Gray STN,Y/G STN,Blue STN
Backlight : Y/G LED, White LED
Viewing Angle: 6:00
Operating Temperature : -20° C - +70° C
Storage Temperature : -30° C - +80° C